MI-TECH SERVICES

16510 Rogers Dr. • New Berlin, WI 53151
Phone: (262) 938-6070 • Fax: (262) 938-6077

April 8, 2008

City of Racine
c/o Tom Johnson – Engineering Dept.
730 Washington Ave Racine Wi.

RE: Request for AT&T Easement
UT#: 6400808

Dear Tom,

Mi-Tech Services is working in conjunction with AT&T and is requesting your assistance and city permission to obtain an easement on the property at **300 Lake Ave (a parking garage), in the City of Racine, Wisconsin**. The easement is needed to place AT&T equipment in order to meet the needs of telephone customers in the area, along with providing high speed advanced internet and television services. There is an existing easement in place on the above property, though AT&T is unable to place the necessary additional equipment on it due to the easement being encroached upon by a city light pole.

AT&T is willing to provide screening of the equipment in the form of evergreens, the cost of which will be borne by AT&T. I am presenting you with a folder of material to accompany this letter and would like to discuss this project in greater detail in the near future in order to further define an appropriate and acceptable location on city property. **Due to aggressive timelines, I will need to know as soon as possible if the City of Racine is willing to work with us. Even If the city is not interested, I would appreciate a call in order that I may then pursue other options.** Please call me at 262-938-6070 x1253 at your earliest convenience.

I sincerely thank you for your time and consideration in this matter and look forward to hearing from you soon.

Yours truly,

Kevin M. Stoeveken
Right-of-Way Agent
262-938-6070 x1253

08-1996

2

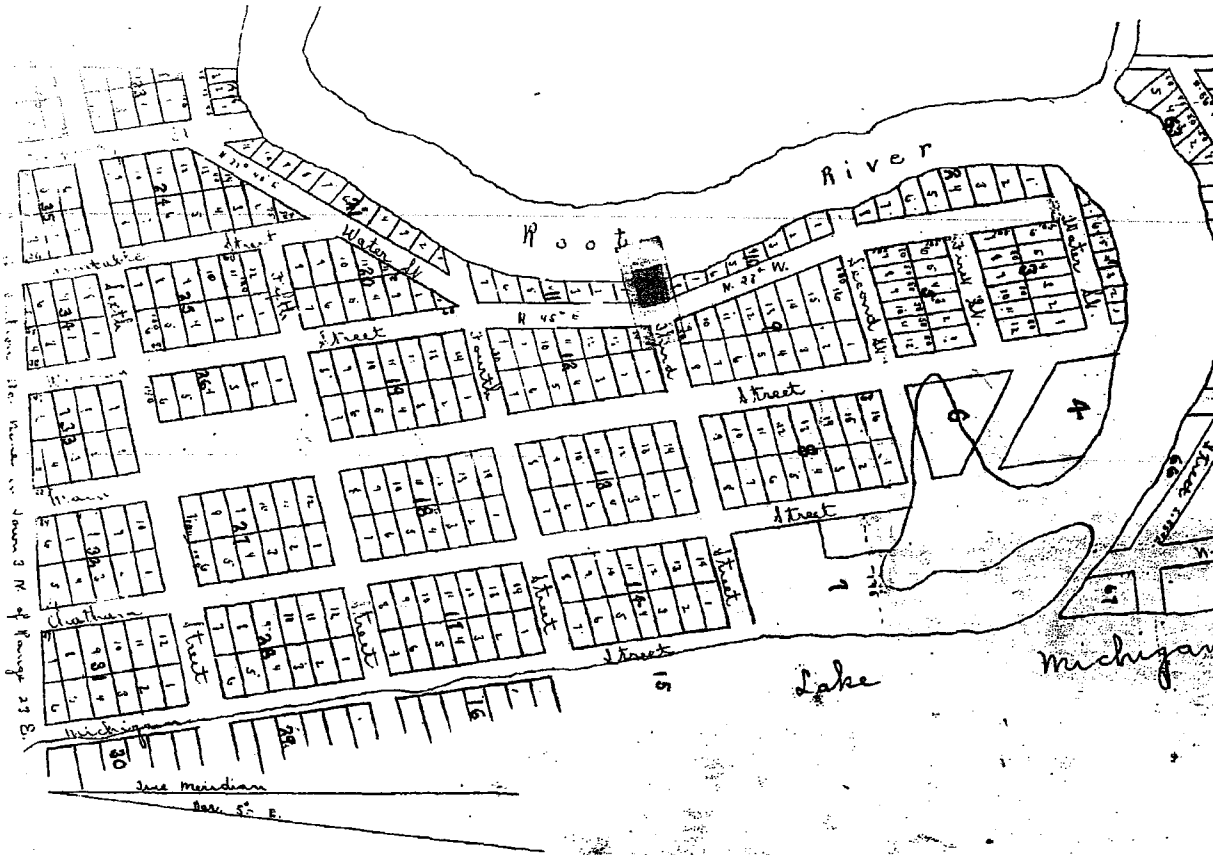


hereby certify that I have examined a copy of the record in the office of the Register of Deeds in and for the County
the Plat of survey made by Joshua Hathaway and Milo Jones and have compared the within Plat
Hathaway and Jones except as follows, in some cases where the length or width of some lots or blocks are
incorrectly stated and have corrected them in blocks 27 & 60 I have made the lots 1 to 8 block 21
proportionate. I have also ascertained the corners of the streets which are represented on the record which are
Section Monument in the South line of the town plat, the bearing being taken with
South side of the river not otherwise represented on the within map
North & South. And I hereby certify that upon the same copy of the plat
September 14 1836. I hereby certify that the within copy of the plat
lots is fifty feet wide. All the regular lots are twenty feet front
represented on the map 60 feet front running to the
Surveyed March 1836.

Witness of the town of Chicago and State of Illinois do certify
forth and that the same is known by the title of
purpose within the space of five years
my hand and seal this third day of November 1836
Witness
By his Agt.

the fourth day of November
acknowledged that the
to some lots as represented by the
perpetually for public
the period of five years from

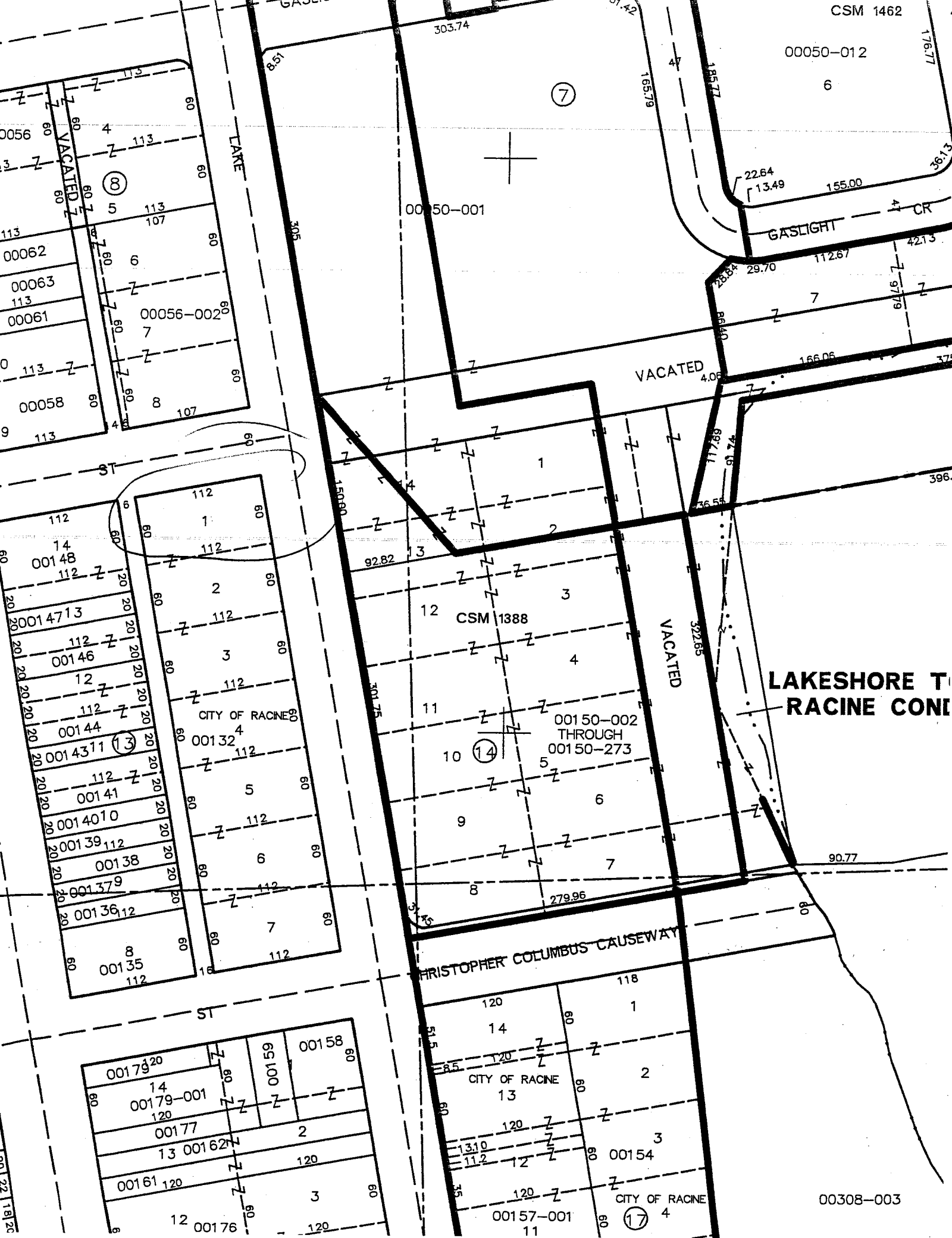
CSM 1462
00050-012
6
7
00050-001
GASLIGHT
CR
VACATED
LAKE
ST
00056-002
00062
00063
00061
00058
00148
00147
00146
00144
00143
00141
00140
00139
00138
00137
00136
00135
CITY OF RACINE
00132
CSM 1388
00150-002
THROUGH
00150-273
LAKESHORE T
RACINE COND
CHRISTOPHER COLUMBUS CAUSEWAY
00179-001
00177
00162
00161
00176
00159
00158
00157-001
00154
00308-003

# EXISTING AT&T EQUIPMENT/FACILITY SKETCH

LOCATED IN LOT 1, BLOCK 13, OF ORIGINAL PLAT OF RACINE,
CITY OF RACINE, RACINE COUNTY, WISCONSIN.

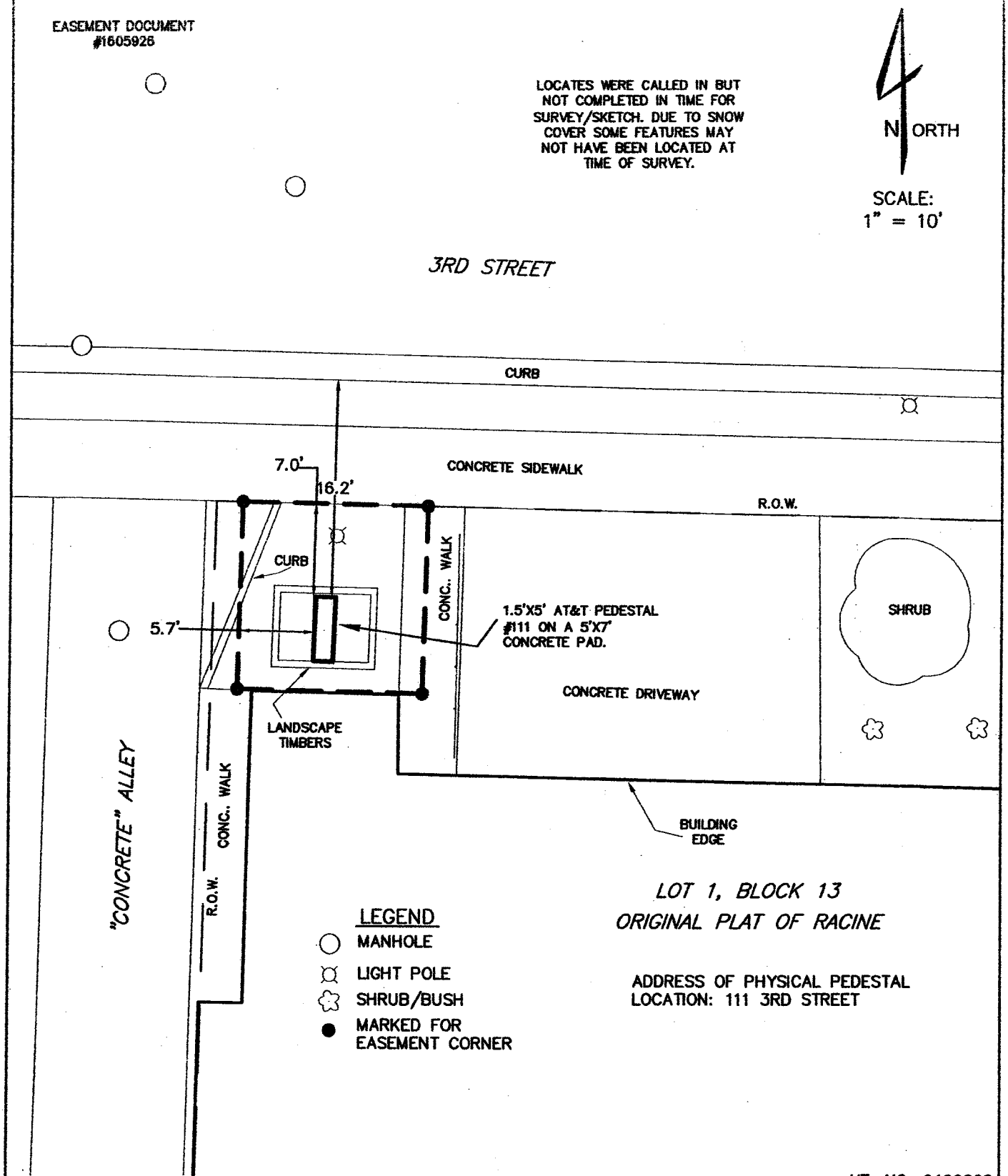


UT. NO. 6400808
RW 2008-94
EASE 51513

LFO

NOTE: AT&T EQUIPMENT IS LOCATED WITHIN THE EASEMENT AREA

New 10' X 10' EASEMENT Desired (8'X10' MIGHT SUFFICE)

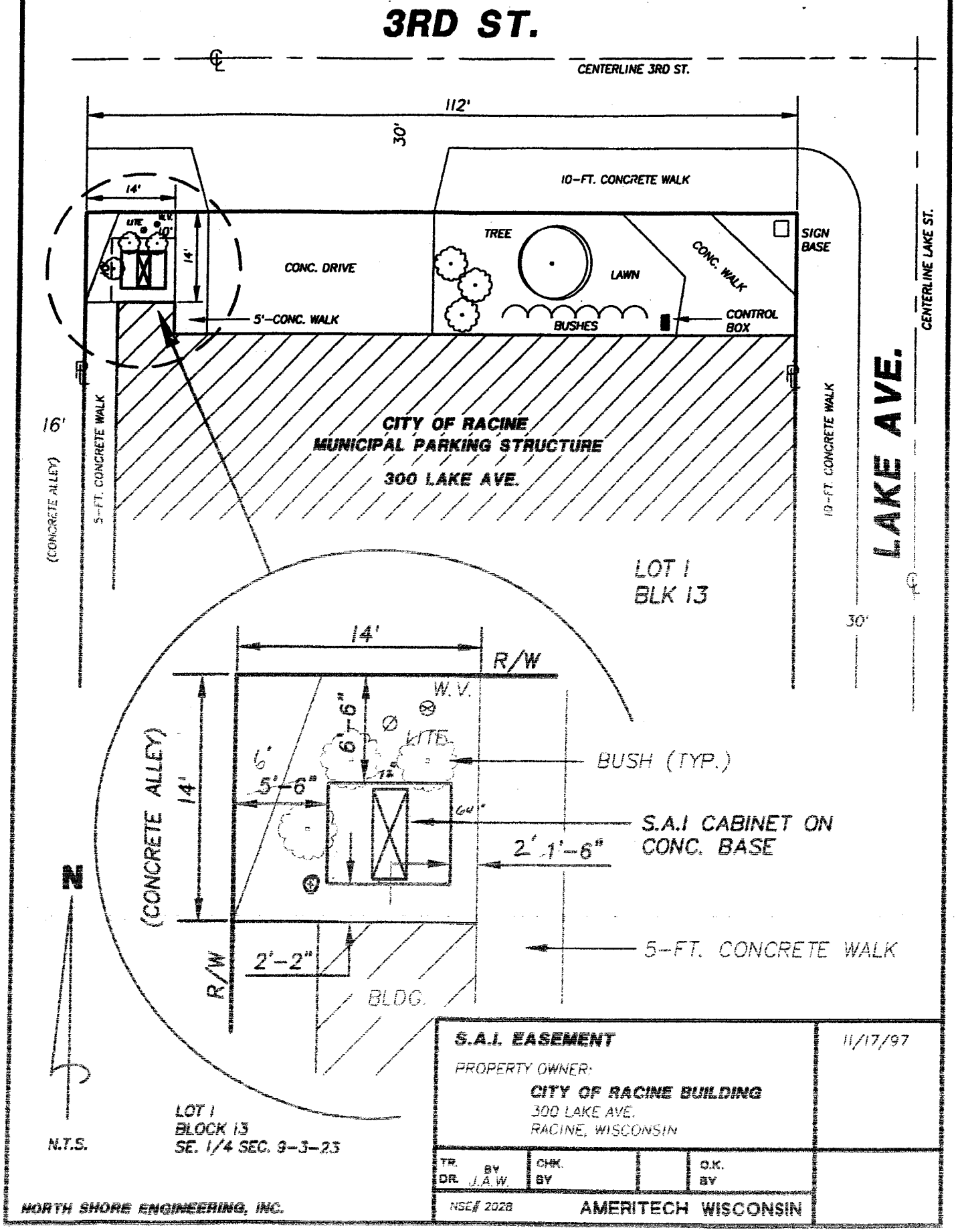
3RD ST.
CENTERLINE 3RD ST.
112'
30'
14'
10'
14'
LITE
W.V.
10-FT. CONCRETE WALK
TREE
LAWN
CONC. WALK
SIGN BASE
CONC. DRIVE
5'-CONC. WALK
BUSHES
CONTROL BOX
CENTERLINE LAKE ST.
LAKE AVE.
16'
(CONCRETE ALLEY)
5-FT. CONCRETE WALK
CITY OF RACINE
MUNICIPAL PARKING STRUCTURE
300 LAKE AVE.
10-FT. CONCRETE WALK
LOT 1
BLK 13
30'
14'
R/W
W.V.
6'-6"
LITE
6'
5'-6"
BUSH (TYP.)
14'
(CONCRETE ALLEY)
6'4"
S.A.I CABINET ON CONC. BASE
2' 1'-6"
N
5-FT. CONCRETE WALK
2'-2"
R/W
BLDG.
N.T.S.
LOT 1
BLOCK 13
SE. 1/4 SEC. 9-3-23
S.A.I. EASEMENT
11/17/97
PROPERTY OWNER:
CITY OF RACINE BUILDING
300 LAKE AVE.
RACINE, WISCONSIN
TR. BY
DR. J.A.W.
CHK. BY
O.K. BY
NSE# 2028
AMERITECH WISCONSIN
NORTH SHORE ENGINEERING, INC.

Sec. 9 T3N R23E

DOCUMENT # 1605926

# AMERITECH GENERAL EASEMENT

REGISTER'S OFFICE
RACINE COUNTY, WI

RECORDED_____

97 DEC 15 AM 8:12

MARK A. LADD
REGISTER OF DEEDS

DOCUMENT NUMBER

**For a valuable consideration of one dollar ($1.00), receipt of which is hereby acknowledged, the undersigned (Grantor) hereby grants and conveys to Wisconsin Bell Telephone Company a.k.a. Ameritech Wisconsin, a Wisconsin Corporation, and its affiliates and licensees, successors and assigns (collectively "Grantees") an easement in, under, over, upon and across the Easement Area (described below), for the purposes of and in order to construct, reconstruct, modify, supplement, maintain, operate and/or remove facilities for the transmission of signals used in the provision of communication, video and/or information services and/or any other services or uses for which such facilities may be used including, but not limited to equipment cabinets or enclosures and support posts or pads, cables, wires, pedestals or other above-ground cable or wire enclosures, marker posts and signs, and other related or useful equipment (described below) and Easement Area to provide service to such facilities and the right of ingress and egress across the Property and the Easement Area for the purpose of access to and use of the easement granted herein.**

RETURN ADDRESS:
Ameritech
c/o Pat Laplante
3045 W. Grange Ave.
Milwaukee, WI 53221
PARCEL NUMBER
(PIN) 00132

2704 946-047

The Property is legally described as:

Lots 1 and 2, and the North 1/2 of Lot 3, Block 13, Original Plat of Racine, according to the recorded plat thereof. Excepting the West 6 feet thereof used for public alley. Being Part of the S.E. quarter of Section 9, T.3N., R.23E., City of Racine, Racine County, Wisconsin.

The Easement Area is legally described as:

The west 14.00 feet of the east 112.00 feet of the north 14.00 feet of said Lot 1.

The Grantor represents and warrants to the Grantee that Grantor is the true and lawful owner of the Property and has full right and power to grant and convey the rights conveyed herein.

Grantee hereby agrees to restore all property disturbed by its activities in use of the easement to the condition existing prior to the disturbance.

Grantee shall have the right to remove or trim such trees and brush in the Easement Area as is necessary to exercise the rights conveyed herein.

The Grantor shall not construct improvements in the Easement Area or change the finish grade of the Easement Area without the consent of the Grantee.

This Easement is binding upon and shall inure to the benefit of the heirs, successors, assigns, and licensees of the parties hereto.

If the grantor at some later time proposes to make any improvements on said parcel of land that would necessarily require the relocation of the facilities of the grantee which have been or may be installed under this easement, said grantee shall relocate those facilities at its expense and within twelve (12) months after reasonable notice has been given as to the necessity for such change.

GRANTOR:

CITY OF RACINE

(Signature)

James M. Smith, Mayor
(Printed)

GRANTOR:

(Signature)

Karen M. Norton, City Clerk
(Printed)

Approved as to Form

City Attorney

## ACKNOWLEDGMENT

State of Wisconsin )
)
County of Racine )

I, Stacey Salvo, being a notary public in and for the state and county aforesaid, do hereby certify that James M. Smith, Mayor, and Karen M. Norton, City Clerk,

personally known to me to be the same persons whose name is subscribed to the foregoing instrument, appeared before me this day in person and acknowledged that they signed and delivered the said instrument as their free and voluntary act for the uses and purposes therein set forth.

Given under my hand and notarial seal this 25th day of November 1997.

Stacey Salvo

Notary Public

My Commission expires: 10-28-01

This document was drafted by the Ameritech Legal Department, 30 S. Wacker Drive, Chicago, IL 60606.
(NSE #2028) U.T. 8109762

DOCUMENT NO.

1039919

WARRANTY DEED
FORM 855

THIS SPACE RESERVED FOR RECORDING DATA

Register's Office } SS.
Racine County, Wis. }
Received for Record 2nd
October A.D., 1978
o'clock P M. and recorded in V
of Records on page
Stanley F. Beal

RETURN TO

THIS INDENTURE, Made this 2nd day of October, A. D., 19 78, between RACINE RESCUE MISSION, INC.

a Corporation duly organized and existing under and by virtue of the laws of the State of Wisconsin, located at Racine, Wisconsin, party of the first part, and THE CITY OF RACINE, a municipal corporation,

~~XXXXXXXXXX~~ duly organized and existing under and by virtue of the laws of the State of Wisconsin, located at Racine, Wisconsin, party of the second part.

Witnesseth, That the said party of the first part, for and in consideration of the sum of One Dollar ($1.00) and other good and valuable consideration

to it paid by the said party of the second part, the receipt whereof is hereby confessed and acknowledged, has given, bargained, sold, remised, released, aliened, conveyed and confirmed, and by these presents does give, grant, bargain, sell, remise, release, alien, convey and confirm unto the said party of the second part, its successors and assigns forever, the following described real estate situated in the County of Racine and State of Wisconsin:

Lots 1 and 2, and the North 1/2 of Lot 3, Block 13, Original Plat of Racine, as surveyed by Moses Vilas, according to the recorded plat thereof. Excepting the West 6 feet thereof used for a public alley. Also excepting the North 30 feet of Lot 3, the South 21.5 feet of Lot 2 and the South 1.25 feet of the North 30 feet of the East 69.6 feet of said Lot 2, Block 13, Original Plat of Racine, as recorded plat.

Said land being in the City of Racine, Racine County, Wisconsin.

Fee Exempt 77.25

(IF NECESSARY, CONTINUE DESCRIPTION ON REVERSE SIDE)

Together with all and singular the hereditaments and appurtenances thereunto belonging or in any wise appertaining, and all the estate, right, title, interest, claim or demand whatsoever, of the said party of the first part, either in law or equity, either in possession or expectancy of, in and to the above bargained premises, and their hereditaments and appurtenances.

To Have and to Hold the said premises as above described with the hereditaments and appurtenances, unto the said party of the second part, and to its successors and assigns FOREVER.

And the said Racine Rescue Mission, Inc., party of the first part, for itself and its successors, does covenant, grant, bargain and agree to and with the said party of the second part, its successors and assigns, that at the time of the ensealing and delivery of these presents it is well seized of the premises above described, as of a good, sure, perfect, absolute and indefeasible estate of inheritance in the law in fee simple, and that the same are free and clear from all incumbrances whatever, excepting therefrom building laws, and zoning ordinances regulating and restricting use of the premises, easements for public utilities, restricting covenants and conditions of record

and that the above bargained premises in the quiet and peaceable possession of the said party of the second part, its successors and assigns, against all and every person or persons lawfully claiming the whole or any part thereof, shall forever WARRANT and DEFEND.

DOCUMENT NO.

1287733

WARRANTY DEED
STATE OF WISCONSIN—FORM 1

THIS SPACE RESERVED FOR RECORDING DATA

Register's Office
Racine County, Wis. } SS

Received for Record 18th day of July A.D. 1989 at 2:31 o'clock P. M. and recorded in Volume 1971 of Records on page 395-396

Helen M. Schutten
Register of Deeds

6.00

RETURN TO
City Atty

THIS INDENTURE, Made this 23 RD day of June, A. D. 19 89 between William D. Gittings, John B. Gittings and Robert S. Gittings, d/b/a GGG Investments, a Wisconsin general partnership part ies of the first part, and City of Racine, a municipal corporation, organized and existing under the laws of the State of Wisconsin part y of the second part,

*Witnesseth*, That the said part ies of the first part, for and in consideration of the sum of One Dollar and other good and valuable considertaion to them in hand paid by the said part y of the second part, the receipt whereof is hereby coniessed and acknowledged, have given, granted, bargained, sold, remised, released, aliened, conveyed and confirmed, and by these presents do give, grant, bargain, sell, remise, release, alien, convey, and confirm unto the said part y of the second part, its heirs and assigns forever, the following described real estate, situated in the City Racine and State of Wisconsin, to-wit:

That part of the Original Plat of Racine, a recorded plat in the City of Racine, Racine County, Wisconsin, described as follows:

The Northerly 1/2 of the "Abandoned" Chicago, Milwaukee, St. Paul & Pacific Railroad right-of-way; bounded on the west by the west line of Packard Avenue extended and bounded on the east by the east line of Packard Avenue extended; said parcel located in the Northeast 1/4 of Section 20, Township 3 North, Range 23 East, City of Racine, Racine County, Wisconsin.

Part of Tax Nos: 14517000 & 14688000

Wisconsin Real Estate Transfer Tax $ 1.80

(IF NECESSARY, CONTINUE DESCRIPTION ON REVERSE SIDE)

Together with all and singular the hereditaments and appurtenances thereunto belonging or in any wise appertaining; and all the estate, right, title, interest, claim or demand whatsoever, of the said part ies of the first part, either in law or equity, either in possession or expectancy of, in and to the above bargained premises, and their hereditaments and appurtenances.

To Have and to Hold the said premises as above described with the hereditaments and appurtenances, unto the said part y of the second part, and to its heirs and assigns FOREVER.

And the said William D. Gittings, John B. Gittings and Robert S. Gittings for their heirs, executors and administrators, do covenant, grant, bargain, and agree to and with the said part y of the second part, its heirs and assigns, that at the time of the ensealing and delivery of these presents they are well seized of the premises above described, as of a good, sure, perfect, absolute and indefeasible estate of inheritance in the law, in fee simple, and that the same are free and clear from all incumbrances whatever, excepting therefrom laws and zoning ordinances regulating the use of the premises, easements for public utilities, restrictions, covenants and conditions of record

and that the above bargained premises in the quiet and peaceable possession of the said part y of the second part, its heirs and assigns, against all and every person or persons lawfully claiming the whole or any part thereof, they will forever WARRANT AND DEFEND.

In Witness Whereof, the said part ies of the first part have hereunto set their hand s and seal s this 23 RD day of June A. D. 19 89

SIGNED AND SEALED IN PRESENCE OF

William D. Gittings (SEAL) 6/26/89
William D. Gittings

John B. Gittings (SEAL) 6/26/89
John B. Gittings

Robert S. Gittings (SEAL) 6/23/89
Robert S. Gittings

(SEAL)

VOL 1971 PAGE 395

State of Wisconsin, Racine County. } Personally came before me, this 26 day of June, A. D., 19 89, the above named William D. Gittings and John B. Gittings to me known to be the person s who executed the foregoing instrument and acknowledged the same.

Erwin T. Nelsen
Notary Public, Racine County, Wis.
My commission (expires) March 14, 1993

THIS INSTRUMENT WAS DRAFTED BY
Carolyn L. Moskonas

NOTARY SEAL

(Section 59.51 (1) of the Wisconsin Statutes provides that all instruments to be recorded shall have plainly printed or typewritten thereon the names of the grantors, grantees, witnesses and notary. Section 59.43 (1) similarly requires that the name of the person who, or governmental agency which, drafted such instrument, shall be printed, typewritten, stamped or written thereon in a legible manner.)

WARRANTY DEED — STATE OF WISCONSIN FORM No. 1 — Wisconsin Legal Blank Company Milwaukee, Wis. (Job 38737)

1754 07 18

300 - 8

1287733

State of California,
Marin County,

Robert S Gittings
Personally came before me, this 23 day of June, A. D., 1989, the above named person, Robert S. Gittings who executed the foregoing instrument and acknowledged the same.

OFFICIAL SEAL
WM R DONNELLY
Notary Public-California
MARIN COUNTY
My Comm. Exp. Jan. 16, 1993

Notary Public, Marin County, California

My Commission 1-16-93

VOL 1971 PAGE 396

300 LAKE ~~St~~ AVE EXISTING EASEMENT SITE ENCROACHED UPON BY CITY LIGHT POLE


200 Lake [illegible] Existing Embankment Mat Excavation Along Bx City Light Pole


Desired Area of New Easement


SECONDARY CHOICE of NEW EASEMENT AREA (left 1/2)

Sock Mill Street off Hill Street (Right bank)

# ALP-248E Cabinet

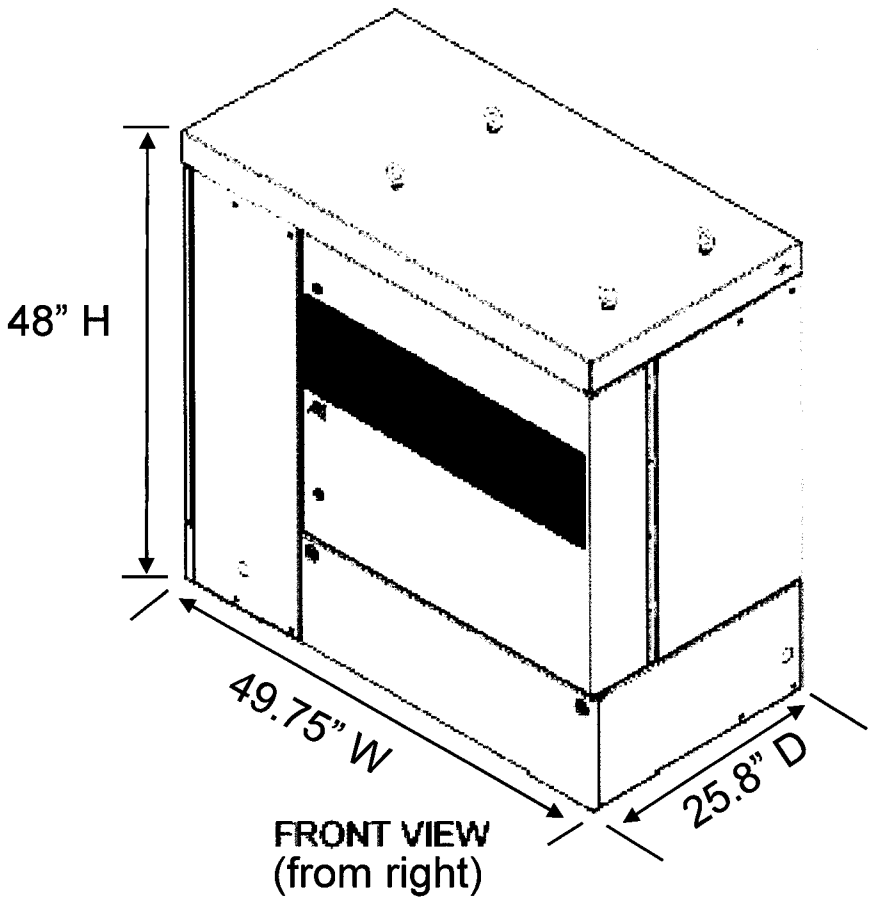


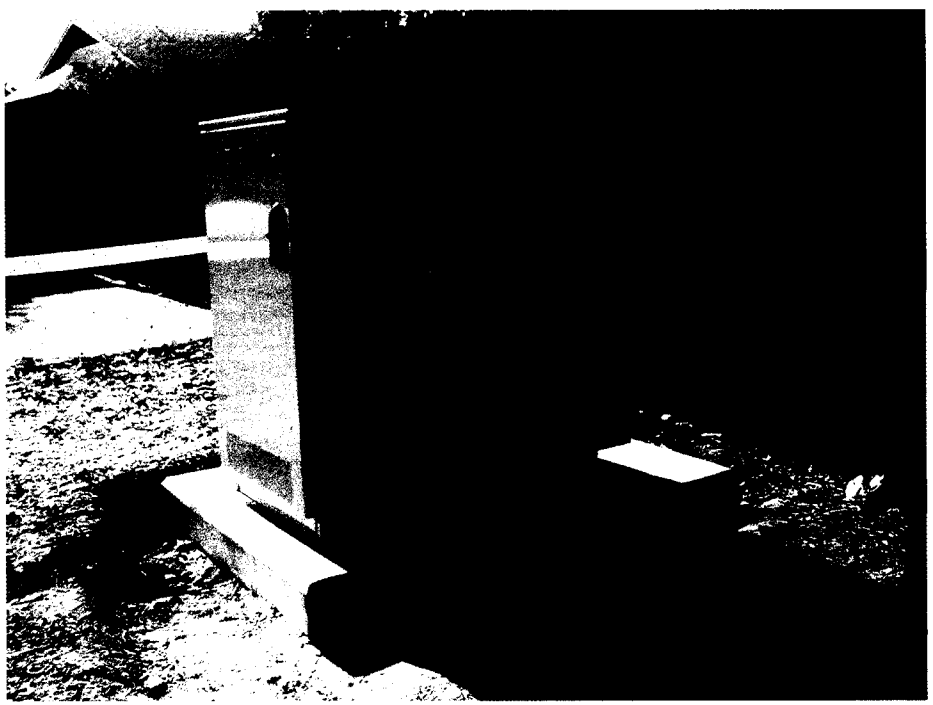

Front View (from left)





Alcatel·Lucent